Suite 600 - 2889 East 12th Avenue
Vancouver, BC V5M 4T5
Toll Free: 1-866-566-7233
www.technicalsafetybc.ca

ATTN: TSSA BPV NATIONAL REGISTRATION -
TECHNICAL STANDARDS & SAFETY AUTHORITY
345 CARLINGVIEW DR
TORONTO ON M9W 6N9

Date:	25-Feb-2026
TSBC Account #:	061440
TSBC Admin Number:	122601
Canadian Registration Number:	0C26278.51

Re: Application for Design Registration

The design, as detailed in your Design Portal application 0C26278.5 - SWAGELOK COMPANY for a Pressure Fitting is registered with the following notes and considerations:

Registered To:	SWAGELOK
Project Name:	0C26278.5 - SWAGELOK COMPANY
Drawing #:	Attachment A (Manufacturing Locations) & Attachment B Dated 10-03-2025
Drawing Revision:	N/A

Conditions of Registration:

(1) Fitting Registration Expiry Date: 26-Nov-2035 (2) The registration is valid until the indicated expiry date only if the Manufacturer maintains a valid quality management system approved by an acceptable third-party agency until that date. Should the approval of quality management system lapse before the expiry date indicated above, this registration shall become void.

Reviewer's Notes:

Any additional conditions and considerations from the initial province of registration shall apply to this BC registration.

Full details of this submission including the scope of registration, design conditions, fabrication details, and calculations pertaining to this design are located in the above Admin Number on the Design Portal. For all other enquiries, please contact eim@technicalsafetybc.ca.

The Engineering Information Management Team

Attachment B: Scope of CRN Registration for Swagelok Diaphragm, DL & DS Series Valves (Category C)

Product Scope

This document represents the scope of Diaphragm, DL / DS Series Valves covered by this submission for CRN approval. These Diaphragm, DL / DS Series Valves have been evaluated in accordance with ASME B31.1 and B31.3 for unlisted components.

Table 1 – Summary Table

Product Series	Main Pressure Bearing Component	Main Pressure Bearing Material	Port Connections and Sizes	Maximum Allowable Working Pressure		Design Code of Construction
				@100°F	At Max. Temp.	
DS (*see below)	Body, Bonnet Nut, Bonnet	316LV SS (ASTM A479)	Tube Butt Welds 1/4", 3/8" Tube Socket & Tube Butt Welds 1/4" & 3/8", 3/8" & 1/2" Swagelok Tube Fittings 1/4", 3/8", 6 mm, 8 mm Female VCR 1/4" Female to Male VCR 1/4" Male to Female VCR 1/4" VCO O-Ring Fitting 1/4" Male VCR Fitting 1/4"	3500 psig	2800 psig@250°F	ASME B31.1 (Unlisted Components) and ASME B31.3 (Unlisted Components)
		316/316L SS Dual Certified (ASTM A479)		3500 psig	2800 psig@250°F	
		316/316L SS Dual Certified (ASTM A479		3500 psig	2800 psig@250°F	
DL (*see below)	Body, Bonnet Nut, Bonnet	316LV SS (ASTM A479)	Tube Butt Welds 1/4", 3/8" Tube Socket & Tube Butt Welds 1/4" & 3/8", 3/8" & 1/2" Swagelok Tube Fittings 1/4", 3/8", 6 mm, 8 mm Female VCR 1/4" Female to Male VCR 1/4" Male to Female VCR 1/4" VCO O-Ring Fitting 1/4" Male VCR Fitting 1/4"	3500 psig	2800 psig@250°F	ASME B31.1 (Unlisted Components) and ASME B31.3 (Unlisted Components)
		316/316L SS Dual Certified (ASTM A479)		3500 psig	2800 psig@250°F	
		316/316L SS Dual Certified (ASTM A479		3500 psig	2800 psig@250°F	

* Mode of operation: hand operated and hand actuated (all materials).

Product Description

All DS/DL Series Diaphragm Valves have the same features as shown below.

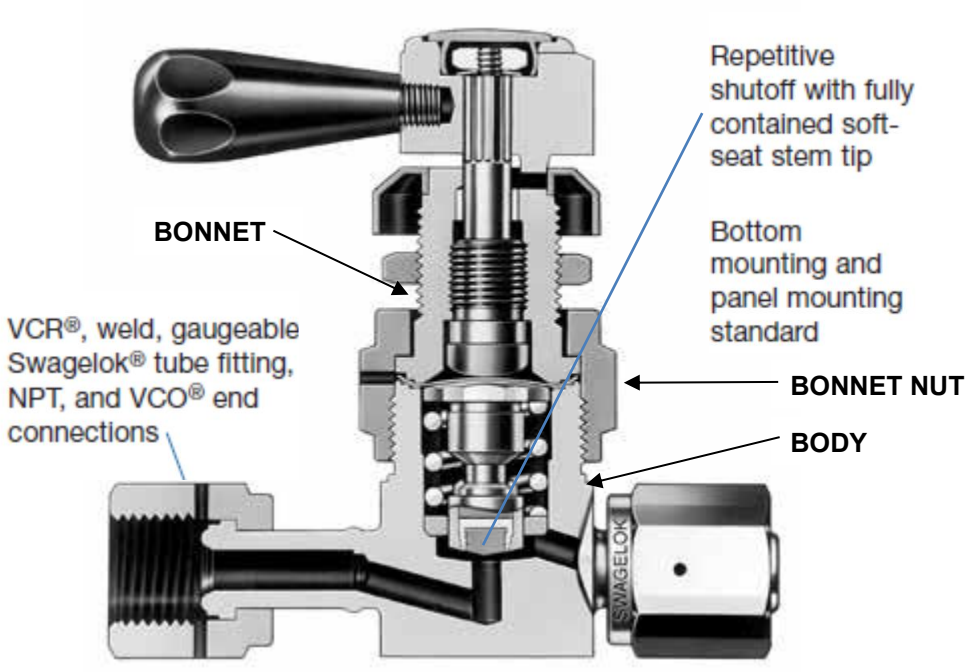

Configurations

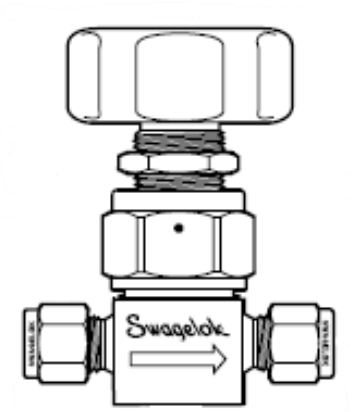

Tube Socket / Tube Butt Welds

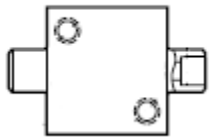

Swagelok Tube Fittings

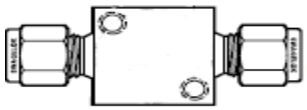

Tube Butt Welds

VCR & VCO Fittings

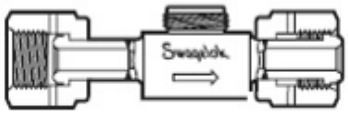

Angled Pattern

Product Options:

Additional options and non-pressure boundary alterations that do not affect pressure-temperature ratings may be made available within the scope of this registration. Examples of these would include, but not be limited to, handle options, indicators, actuators, stem tips, etc.

Quality System

The Swagelok Company quality system complies with the requirements of ISO 9001:2015. The Swagelok Company maintains British Standards Institution Certificate of Registration Number FM 01729, which applies to all locations listed on the Certificate.

References

The product catalog does not represent the full scope of the registration but rather details some of the most common options.

- Diaphragm Valves, DS and DL Series Catalog – MS-01-73, Rev. O